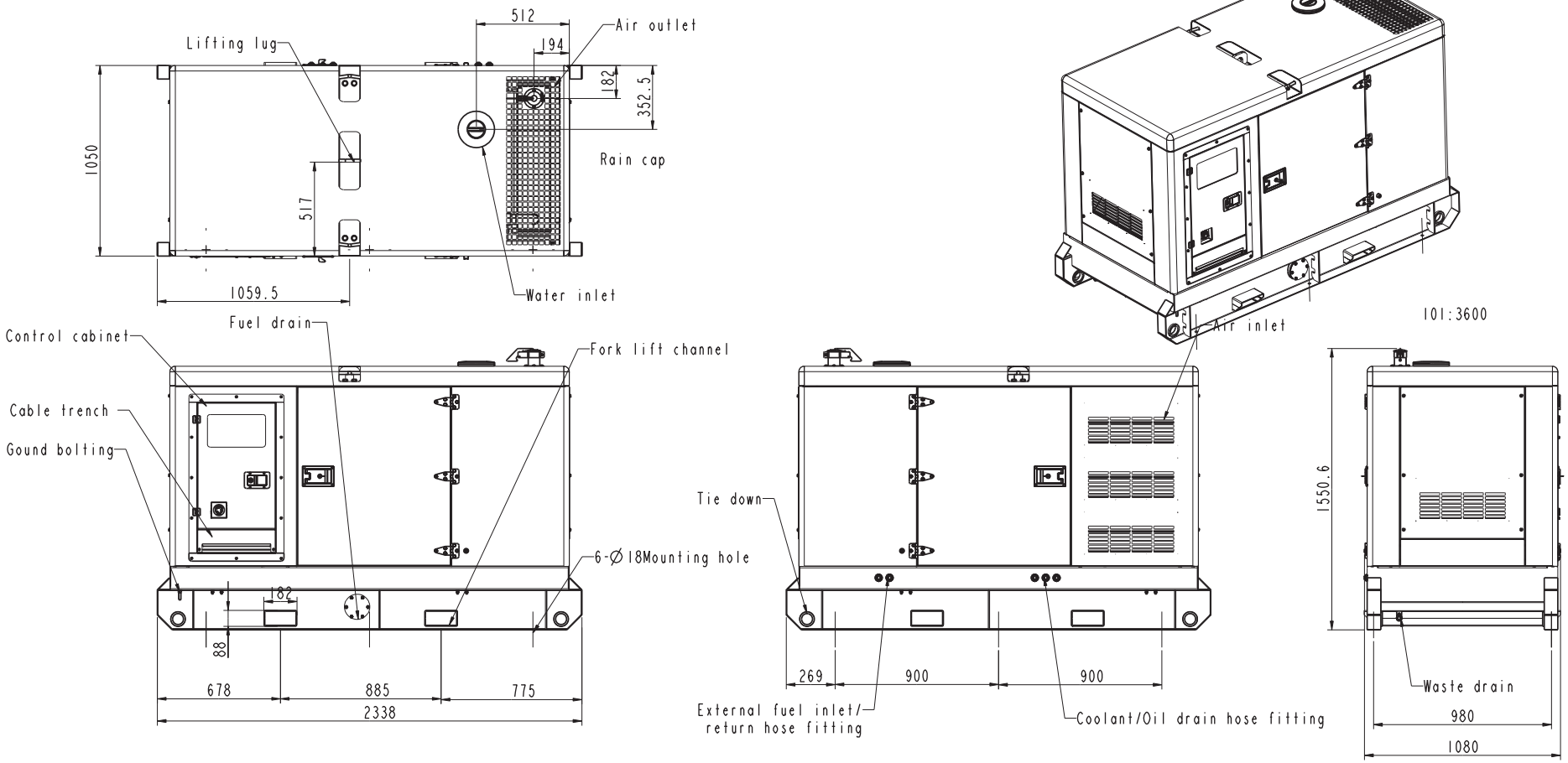

DEMENSIONS L*W*H (mm)	FUEL TANK CAPACTYL	DRY WEIGHT (kg)
2338*1080*1560.5	180	1375.22

POWERLINK
Power Systems
www.powerlinkgenset.com

/Appellation	Sound-proof type generator set	Edition: D	FIRST ANGLE PROJECTION
/Drg.No.	1000008319		
Designer: 1121	Collate: 0643	Auditing: 0643	
Material		/Weight(Kg):1376.53	/Scale: 73:3600
		/Date:2011-04-12	
Technics:	Standardization:	Authorize: 0034	/Sheet: 1/2