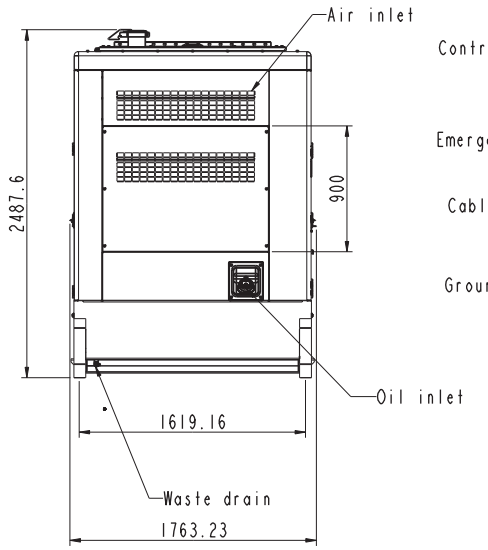

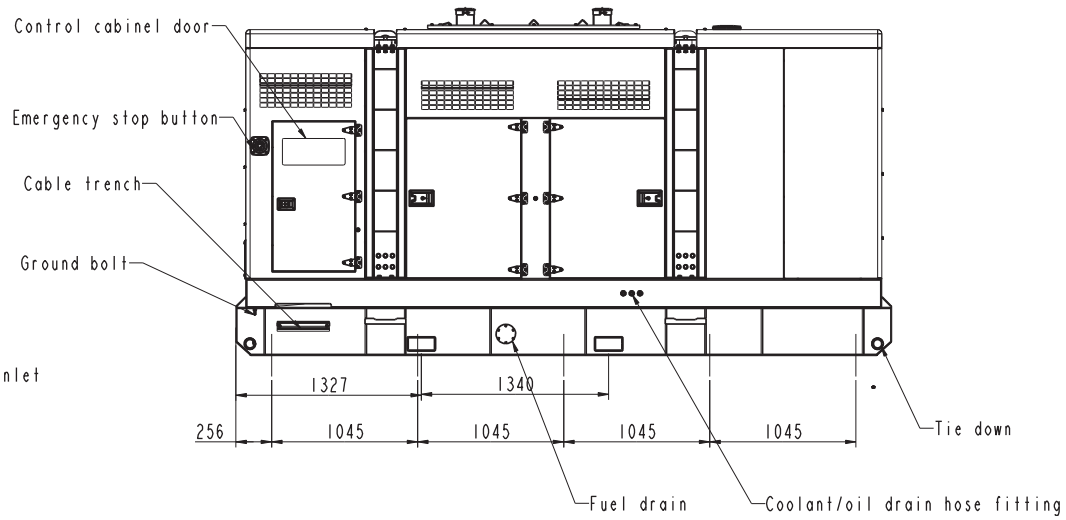

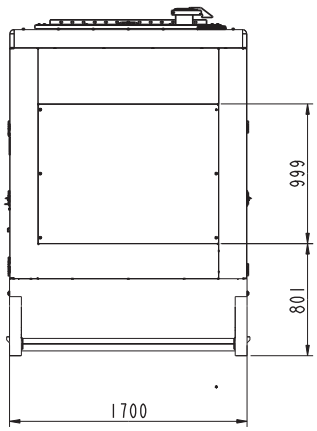

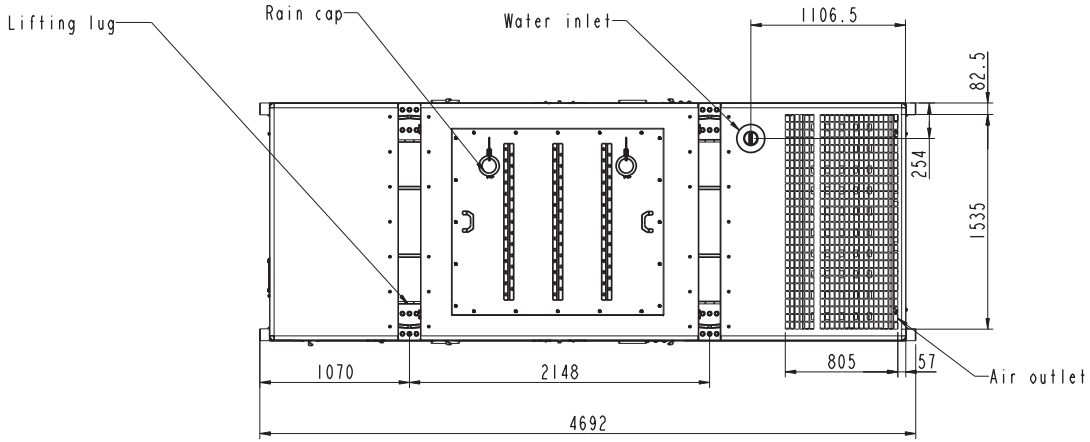

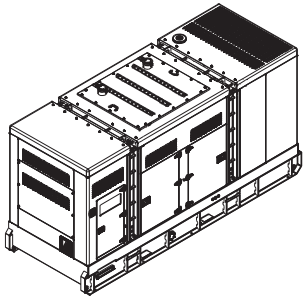

DIMENSIONS LxWxH mm	FUEL TANK CAPACITY L	DRY WEIGHT kg
4692x1700x2487.6	945	6381

POWERLINK
Power Systems
www.powerlinkgenset.com

/Appellation	Sound-proof type generator set	Edition:	FIRST ANGLE PROJECTION
/Drg.No.	1000020505	C	
Designer: 1021	Collate: 0643	Auditing: 0034	
Material		/Weight(Kg):6382.48	/Scale: 17:1800
		/Date:2010-12-09	
Technics:	Standardization:	Authorize: 0001	/Sheet: 1/3